Current part is item (12) on diagram. Available at www.oshkoshequipment.com

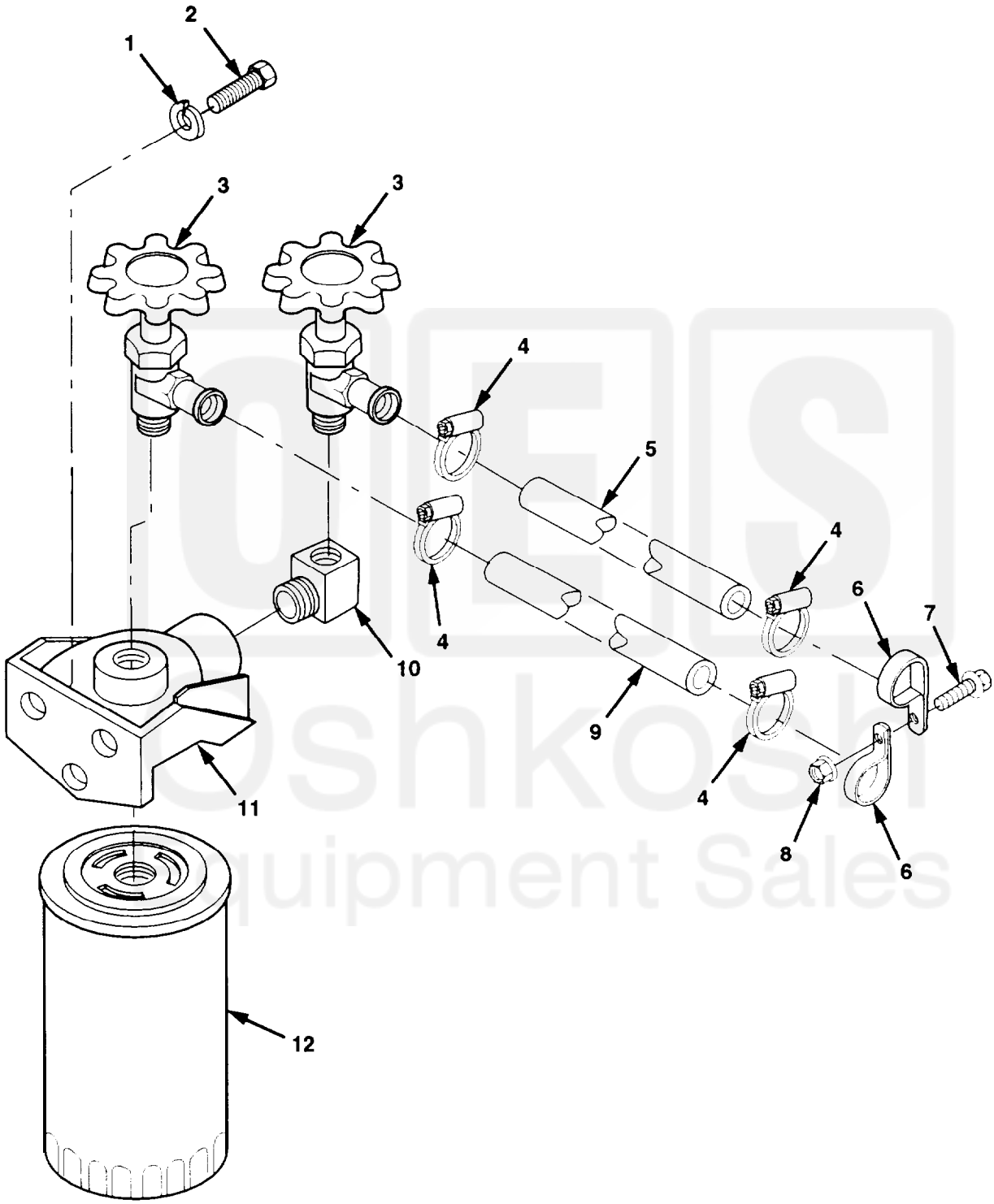

Figure 50. Coolant Filter

Current part is item (12) on diagram. Available at www.oshkoshequipment.com

Current part is item (12) on diagram. Available at www.oshkoshequipment.com

Section II. REPAIR PARTS LIST

(1) ILLUSTRATION (a) FIG NO.	(b) ITEM NO.	(2) SMR CODE	(3) NATIONAL STOCK NUMBER	(4) CAGE	(5) PART NUMBER	(6) DESCRIPTION USABLE ON CODE	(7) UM	(8) QTY INC IN UNIT
						GROUP 0508 COOLANT FILTER		
50	1	PAOZZ	5310-00-407-9566	96906	MS35338-45	WASHER,LOCK 5/16	EA	3
50	2	PAOZZ	5306-01-075-8515	96906	MS90725-36	SCREW.CAP,HEX 5/16-18 X 1 1/4	EA	3
50	3	PAOZZ	4820-01-253-2787	09990	V404PH-10-6	VALVE,ANGLE	EA	2
50	4	PAOZZ	4730-01-398-8329	7Z588	CT-9410	CLAMP.HOSE	EA	4
50	5	M00ZZ	- - -	45152	69851AX39	HOSE.NONMETALLIC MAKE FROM PART NUMBER 26241. CAGE 24161. APPROXIMATELY 39 INCHES LONG	EA	1
50	6	PAOZZ	5340-00-404-4098	75272	COV1713	CLAMP.LOOP	EA	2
50	7	PAOZZ	5305-01-337-9120	45152	1754140	SCREW.CAP.FLANGED 1/4-20 X 1	EA	1
50	8	PAOZZ	5310-01-346-9445	45152	1600460	NUT.SELF-LOCKING 1/4-20	EA	1
50	9	MOOZZ		45152	69851AX40	HOSE.HEATER MAKE FROM PART NUMBER 26241. CAGE 24161. APPROXIMATELY 40 INCHES LONG.	EA	1
50	10	PA0ZZ	4730-00-278-4822	79470	3400X6	ELBOW.PIPE	EA	1
50	11	PFOZZ	2940-01-208-9015	59549	H-350	HEAD.FLUID FILTER	EA	1
50	12	PAOZZ	- - -	59549	PFC-8A	ELEMENT.FILTER (SCHEDULED MAINTENANCE)	EA	1
50	12	PAOZZ	2930-01-104-4988	90915	90002015	FILTER ELEMENT (INITIAL FILL)	EA	1

Current part is item (12) on diagram. Available at www.oshkoshequipment.com